XCMG

MOBILE ELEVATING WORK PLATFORM

8 m SERIES

XG0807HD XG0807HDW XG0807AC XG0807ACW

This printed matter does not belong to the contract and is not a part of the car purchase contract. The company reserves the right to make changes to product models, parameters, and configurations without prior notice. The picture is for reference only, the actual product shall prevail. (The right of final interpretation belongs to our company. First printing in September 2021)

MOBILE ELEVATING WORK PLATFORM

8 m SERIES

XG0807HD XG0807HDW XG0807AC XG0807ACW

Parameter

Item	Unit	XG0807HD	XG0807AC	XG0807HDW	XG0807ACW
Dimension					
Maximum working height	m	7.8	7.8	7.8	7.8
Platform maximum height	m	5.8	5.8	5.8	5.8
Overall length a	mm	1900	1900	1900	1900
Overall length (without ladder)	mm	1680	1680	1680	1680
Overall width b	mm	760	760	810	810
Overall height c	mm	2160	2160	2160	2160
Overall height (platform folded)	mm	1830	1830	1830	1830
Work platform dimension (L d × W e × H)	mm	1670 × 740 × 1243	1670 × 740 × 1243	1670 × 740 × 1243	1670 × 740 × 1243
Extending size of the extension platform	mm	900	900	900	900
Minimum ground clearance (elevated state/stowed state)	mm	20 / 71	20 / 71	20 / 71	20 / 71
Tire	mm	323 × 100	323 × 100	323 × 100	323 × 100
Wheel base f	mm	1360	1360	1360	1360
Performance					
Maximum number of occupants	/	2	2	2	2
Work platform rated load	kg	230	230	230	230
Extension platform rated load	kg	115	115	115	115
Travel speed (lowered position/elevated position)	km/h	3 / 0.8	4.5 / 0.8	3 / 0.8	4.5 / 0.8
Minimum turning radius (inside wheel/outside wheel)	m	0 / 1.75	0 / 1.75	0 / 1.75	0 / 1.75
Work platform raising/lowering time	s	13–30 / 25–35	13–30 / 25–35	13–30 / 25–35	13–30 / 25–35
Maximum gradeability	%	25	25	25	25
Tilt alarm angle (sideways/forward or back)	°	1.5 / 3	1.5 / 3	1.5 / 3	1.5 / 3
Total mass (Lead–aci /Li–ion battery)	kg	1550	1550	1580	1580
Power source					
Battery	/	Maintenance–free lead–acid battery / lithium battery			
Battery voltage	V	24 / 25.6			
Battery capacity	AH	280 / 160			
Standard configuration		Folding guardrail, self–locking door, one–way extension platform, front wheel drive, AC motor walking (XG0807AC, XG0807ACW)/hydraulic motor walking (XG0807HD, XG0807HDW), maintenance–free battery, lubrication–free bearing, swing–out tray, action bee Buzzer, working light, emergency stop button, safety maintenance bracket, full proportional control, high altitude limit speed protection system, pit protection system, tilt protection system, charging protection system, automatic braking system, fault diagnosis system, emergency descent system, GPS tracking system , Standard forklift hole			
Optional configuration		AC power cord、Compressed air pipe 、work light、Overweight alarm function 、BMSManagement system 、Lithium battery system			

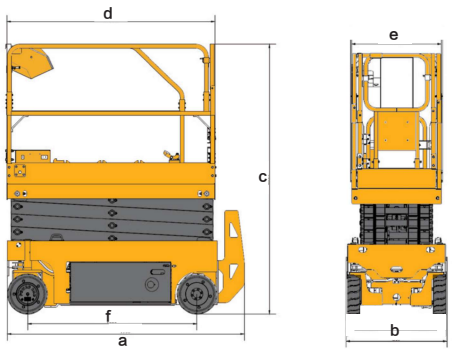

This printed matter does not belong to the contract and is not a part of the car purchase contract. The company reserves the right to make changes to product models, parameters, and configurations without prior notice. The picture is for reference only, the actual product shall prevail. (The right of final interpretation belongs to our company. First printing in September 2021)